Ultrasonic Radar System: Real-Time Object Detection And Distance Measurement Using Arduino

[1,2,3,4,5] Dr. Viswanadham Ravuri, Yekkaluri Sai Ruthvika, Kommu Srinithya, Bonthu Leelavanitha, Chinnapaaga Akhila
[1,2,3,4,5]*Electronics and Communication Engineering*
[1,2,3,4,5]*BVRIT HYDERABAD College of Engineering for Women(Affiliated to JNTUH)*
Hyderabad, India
[1] viswanadh.r@bvrithyderabad.edu.in
[2] 21wh1a0487@bvrithyderabad.edu.in
[3] 21wh1a04c4@bvrithyderabad.edu.in
[4] 21wh1a04a0@bvrithyderabad.edu.in
[5] 21wh1a0479@bvrithyderabad.edu.in

***Abstract*—The Smart Ultrasonic Radar System represents a compact and cost-effective solution for real-time object detection, distance measurement, and environmental mapping. Utilizing an Arduino UNO, an ultrasonic sensor, and a servo motor, the system scans its surroundings, processes spatial data, and displays detected objects on an interactive radar interface. The ultrasonic-based detection method ensures precise, low-power performance, making the system ideal for applications in autonomous navigation, security surveillance, and industrial automation. Real-time visualization improves monitoring capabilities, while the open-source, scalable design facilitates easy modifications for various use cases. The system offers an efficient and adaptable approach to advancements in embedded systems, robotics, and intelligent sensing technologies.**

Keywords— Ultrasonic Radar, Object Detection, Distance Measurement, Real-time Visualization

I. Introduction

The Ultrasonic Radar System provides a cost-effective solution for real-time object detection and distance measurement using ultrasonic waves. Operating at frequencies above 20,000 Hz, ultrasonic sensors detect objects by emitting waves that reflect off surfaces, enabling precise distance and position calculations. The system, built with an Arduino UNO, ultrasonic sensor, and servo motor, continuously scans its surroundings and visualizes detected objects on an interactive interface. The technology is widely applied in autonomous navigation, security surveillance, and industrial automation. The system's ability to perform non-contact measurements enhances its efficiency in detecting obstacles and tracking movement. By integrating hardware with processing software, it ensures accurate real-time monitoring. The modular design allows customization for advanced applications, including machine learning and IoT integration. With its affordability, adaptability, and reliability, the system serves as an accessible tool for research, automation, and smart monitoring, contributing to advancements in embedded systems and intelligent sensing.

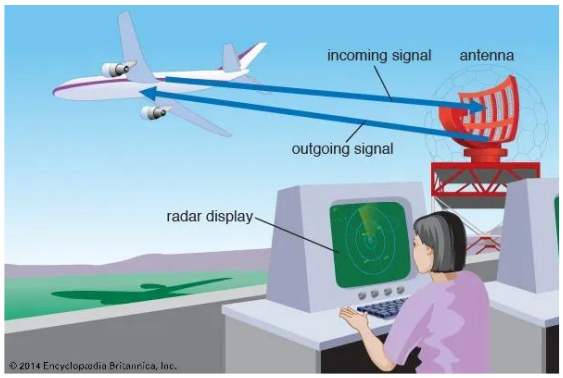

Fig.1: Radar tracking an aircraft using transmitted and reflected signals on a radar screen.

A. Objectives

The objectives of Ultrasonic Radar System are:

- Design a cost-effective and portable system for real-time object detection and distance measurement.
- Develop an interactive radar interface for intuitive visualization of detected objects.
- Demonstrate ultrasonic sensors as a reliable alternative to LIDAR for efficient scanning and detection.
- Enhance applications in robotics and automation, supporting advancements in intelligent sensing technologies.

II. Literature Survey

Research on ultrasonic radar systems has evolved significantly over the years, driven by advancements in sensor technology, microcontrollers, and data processing techniques. Early studies in the 2000s laid the foundation by exploring ultrasonic wave propagation and object detection principles.

The introduction of low-cost microcontrollers like Arduino around 2010 made ultrasonic radar systems more accessible, leading to widespread adoption in applications

XXX-X-XXXX-XXXX-X/XX/$XX.00 ©20XX IEEE

such as autonomous navigation and security. Studies from 2010 to 2014 demonstrated the feasibility of real-time object detection and distance measurement, showcasing the potential of ultrasonic sensors in cost-effective sensing solutions.

Between 2015 and 2017, research focused on enhancing ultrasonic radar systems for surveillance and security applications. The integration of ultrasonic sensors with servo motors expanded scanning capabilities, allowing dynamic environmental coverage. Studies highlighted their effectiveness in perimeter monitoring, providing a low-cost alternative to traditional security systems. Research also explored improvements in motion detection and tracking, increasing the reliability of ultrasonic-based monitoring solutions.

Advancements from 2018 to 2020 addressed challenges related to sensor limitations, environmental noise, and slow scanning speeds. Improved sensor hardware and refined signal processing algorithms enhanced detection accuracy and range. Research demonstrated the potential of ultrasonic radar systems in obstacle detection for autonomous systems, reinforcing their viability as an alternative to expensive LiDAR solutions. The ability to achieve efficient angular scanning through servo motor integration further contributed to the growing use of ultrasonic radar in robotics and automation.

Studies from 2021 to 2022 focused on sensor fusion techniques to improve detection accuracy. Researchers explored the integration of ultrasonic sensors with infrared and PIR sensors, reducing false positives and enhancing performance in complex environments. These improvements made ultrasonic radar systems more reliable for real-time object tracking and environmental sensing. Recent research from 2023 onward has explored the role of artificial intelligence and IoT in advancing ultrasonic radar technology. Machine learning algorithms have been applied for real-time object classification, improving detection efficiency.

The integration of IoT has enabled remote monitoring and control, expanding applications in smart surveillance, disaster management, and industrial automation. With continuous developments in sensor technology, data processing, and AI-driven analytics, ultrasonic radar systems continue to evolve as a robust and cost-effective solution for real-time sensing and automation.

III. System Design And Methodology

The sensors emit sound waves, measure the time taken for them to bounce back, and calculate object distances. The servo motor rotates the sensors for dynamic scanning, while the Arduino processes the data and displays it on a radar-like interface. The system can be powered externally and customized with additional sensors for applications in security, robotics, and autonomous navigation.

A. Hardware Equipment

The conceptual design focuses on making the game accessible by incorporating auditory feedback, enhancing the gameplay for visually impaired users. The core functionality of the game includes an electronic board, dice with speech output, and an interface that delivers real-time updates.

1) Arduino UNO

Arduino Uno is powered by the ATmega328P microcontroller, which has 32 KB of flash memory, 2 KB of SRAM, and 1 KB of EEPROM. Acts as the central processing unit for data acquisition and control. The Arduino Uno serves as the core controller for an ultrasonic radar system. It processes data received from the ultrasonic sensor, which measures the distance to obstacles by emitting and receiving ultrasonic waves. The Uno's digital I/O pins facilitate communication with the sensor and actuators, while its analog inputs handle additional sensor data if needed.

Fig.2: Arduino UNO

2) USB Cable

The USB cable provides power to the Arduino Uno and facilitates communication between the Arduino and a computer for programming and data exchange. The USB cable serves a dual purpose in the ultrasonic radar system: powering the Arduino Uno and allowing the user to upload the radar program to the microcontroller. During development, it enables real-time data monitoring and debugging by maintaining a continuous connection between the Arduino and the computer. Its role in programming and powering the system makes it indispensable for initializing and testing the radar functionality.

Fig.3: USB Cable for Arduino Uno

3) Ultrasonic Sensor (e.g., HC-SR04)

Measures the distance and position of objects by emitting ultrasonic waves and receiving the reflected waves. The ultrasonic sensor acts as the primary distance-measuring component in the radar system. It emits ultrasonic pulses and measures the time taken for the reflected echoes to return, which allows the system to calculate the distance to nearby objects. When integrated with a servo motor, the sensor can rotate, enabling it to scan across a wide field of view. The sensor's data is then processed by the Arduino, which plots the detected objects on a visual interface, simulating a radar display. Its reliable operation in various environmental conditions and non-contact sensing capability make it an essential component for creating an effective ultrasonic radar system.

Fig.4: Ultrasonic Sensor

The working principle of ultrasonic sensor is as follows:

High level signal is sent for 10us using Trigger. The module sends eight 40 KHz signals automatically, and then detects whether pulse is received or not. If the signal is received, then it is through high level. The time of high duration is the time gap between sending and receiving the signal.

Distance= (Time x Speed of Sound in Air (340 m/s))/2 (1)

4) Servo Motor

Servo motors provide precise control over angular rotation, typically between 0° and 180°, making them ideal for applications requiring accurate positioning. The servo motor is responsible for enabling the ultrasonic sensor to rotate and scan its surroundings, allowing the radar system to cover a wide field of view. Controlled by the Arduino, the servo motor adjusts the angle of the ultrasonic sensor step by step, ensuring systematic and precise scanning. The motor's angular position directly determines the direction in which the sensor measures distances, which is crucial for plotting an accurate radar map.

Fig.5: Servo Motor

5) Breadboard

A breadboard is a reusable platform for assembling and testing electronic circuits without soldering, making it an essential tool for prototyping and experimentation. The breadboard acts as the central platform for connecting and organizing the components of the ultrasonic radar system, such as the Arduino, ultrasonic sensor, and servo motor. The breadboard's modularity allows quick adjustments to the circuit, enabling seamless integration and troubleshooting of the radar system. Its flexibility and reusability make it an invaluable component in building and refining the system.

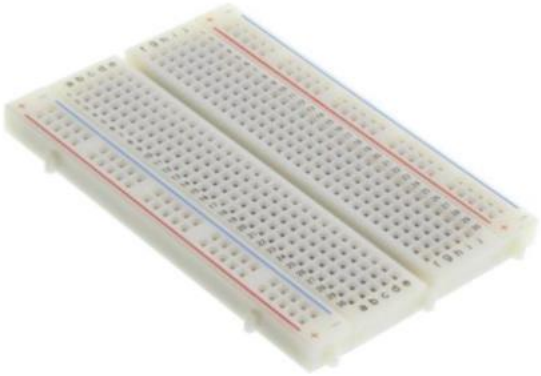

Fig.6: Breadboard

6) Jumper Wires

Jumper wires are essential for connecting the various components of the ultrasonic radar system, including the Arduino, ultrasonic sensor, and servomotor motor.

Fig.7: Jumper Wires

B. Software Equipment

1) Arduino IDE

The Arduino IDE provides a user-friendly interface to write, compile, and upload code to the Arduino Uno for controlling the ultrasonic radar system. It includes built-in libraries, such as Servo.h for controlling the servo motor, and allows importing third-party libraries for enhanced functionalities, streamlining development for the radar system.

Fig.8: Arduino IDE Software

2) Processing IDE

Processing IDE is a flexible software sketchbook and language used for visual arts and design, often applied to create visualizations and interactive applications. Visualizing the data from the Arduino as a real-time radar interface. Receiving data from the Arduino via serial communication and translating it into a user-friendly graphical interface.

Fig 9 : Processing IDE Software

Specifications :-

- Free to download and open source.
- Interactive programs with 2D, 3D or PDF output .
- OpenGL integration for accelerated 2D and 3D .
- For GNU/Linux, Mac OS X, and Windows Over 100 libraries extend the core software.

C. Methodology

In order to testify the working of the system, after its designing, construction and programming we placed few objects in front of the ultrasonic sensor. As the motor started to rotate, our monitor started to display the output through processing IDE. Hence, when the sensor crossed over the object it showed a red segment with the distance and angle where the object is placed.

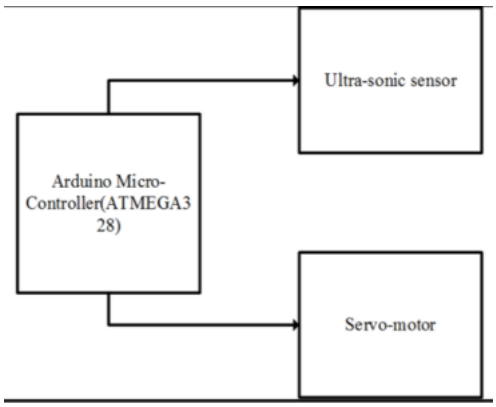

Fig 10: Hardware System Design of Radar System

The Fig 10. provides an overview of the ultrasonic radar system using Arduino. The Arduino microcontroller controls the ultrasonic sensor for object detection and the servo motor, which rotates 180 degrees for scanning. The sensor detects obstacles, determines their distance and angle, and transmits the data to the processing IDE for visualization. The servo motor continuously moves back and forth, enabling dynamic scanning. The Arduino manages all operations, including motor rotation, data collection, encoding, and display. The processed results are displayed on the screen, showcasing the system's real-time object detection and tracking capabilities.

D. Working

The ultrasonic radar system, controlled by an Arduino, uses an ultrasonic sensor for object detection and a servo motor for scanning. The sensor detects obstacles, measures distance and angle, and sends data to the processing IDE for visualization. The servo motor continuously rotates, enabling dynamic scanning. The Arduino manages motor control, data processing, and display. The system provides real-time object detection and tracking, making it useful for security, robotics, and navigation applications. The processed results are displayed on the screen, offering a clear representation of detected objects and their positions.

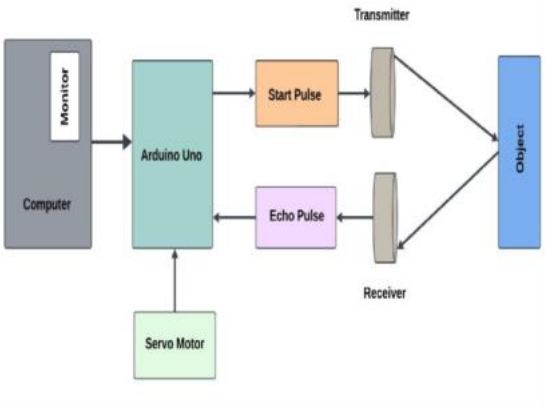

Fig.11 : Ultrasonic Radar System Block Diagram

IV. IMPLEMENTATION

To implement the Ultrasonic Radar System, begin by connecting an ultrasonic sensor (e.g., HC-SR04) to an Arduino UNO to measure distances and detect objects. Mount the sensor on a servo motor to enable rotational scanning, covering a predefined angular range. Use a simple serial communication protocol to send the processed data to a computer or display module. Power the system using a stable 5V supply and ensure proper wiring for reliability. Finally, test and calibrate the system to optimize performance for specific applications like surveillance, navigation, or object detection.

A) Hardware Integration

Hardware integration for the Ultrasonic Radar System involves assembling key components, including an Arduino UNO, an HC-SR04 ultrasonic sensor, a servo motor, and a power supply. The ultrasonic sensor is connected to the Arduino's digital input and output pins for triggering and receiving echo signals. The sensor is mounted on a servo motor, enabling rotational movement for scanning the surroundings. The servo motor's signal pin is linked to one of the Arduino's PWM-capable pins to control its rotation. Power is supplied via a USB connection or an external 5V power source, ensuring proper voltage regulation to prevent overload. A breadboard is used for prototyping, securing all connections for stable operation.

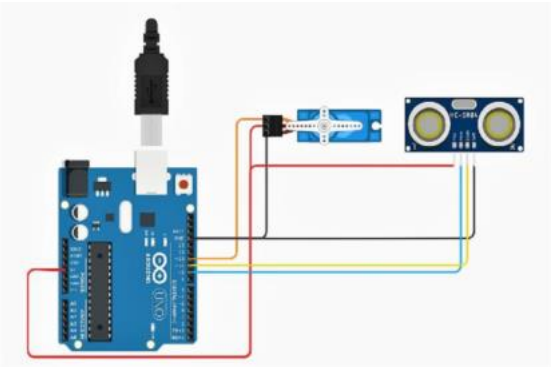

Fig.12: Hardware System Design

For output visualization, the Arduino transmits data to a PC via USB, where a graphical user interface (GUI) displays real-time radar readings using software like Processing or Python.

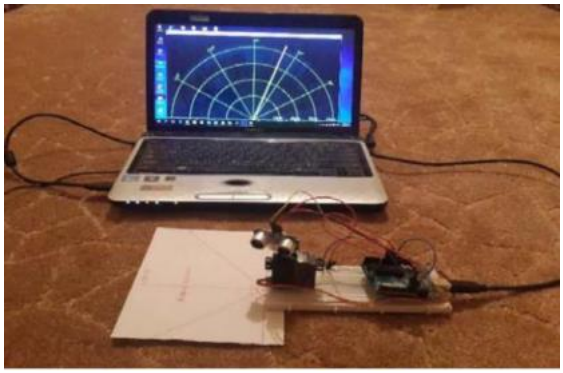

Fig 13 : Hardware Model of the project

The visualization provides a dynamic, radar-like representation of detected objects. A sturdy mechanical setup ensures smooth operation, with the ultrasonic sensor and servo motor firmly mounted on a stable base. Testing involves running the servo motor, capturing distance data, and refining configurations for accuracy. Proper integration and fine-tuning optimize the system's reliability, making it suitable for applications like security, robotics, and autonomous navigation.

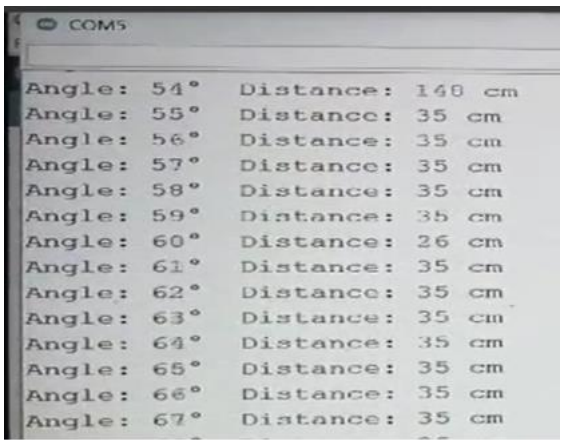

Fig.14 : Serial Monitor Display in Arduino IDE

B) Software Development

The software for the Ultrasonic Radar System is developed using the Arduino IDE to control the ultrasonic sensor and servo motor. The Arduino sends trigger signals to the HC-SR04 sensor and measures the echo return time to calculate object distances using the time-of-flight formula. The servo motor rotates incrementally (e.g., 0° to 180°) using PWM signals, capturing distance data at each step. Calibration routines account for sensor delays and environmental factors, ensuring accurate measurements.For visualization, the Arduino transmits distance and angle data via serial communication to a connected computer or display module.

A GUI, developed using Processing or Python, processes the data and creates a real-time radar-like interface with object detection markers and dynamic range display. The software incorporates error handling for sensor anomalies and serial communication failures. Extensive testing ensures smooth operation, refining the system's adaptability for applications in security, robotics, and autonomous navigation.

V. RESULTS

The Ultrasonic Radar System successfully detects objects and visualizes their positions and distances in real-time. The key observations and outcomes from the system are as follows:

A. Radar Interface Visualization

The radar-like interface dynamically plots detected objects based on their distance and angle. The visualization provides a clear representation of the surrounding

environment, with detected objects highlighted in the radar sweep.

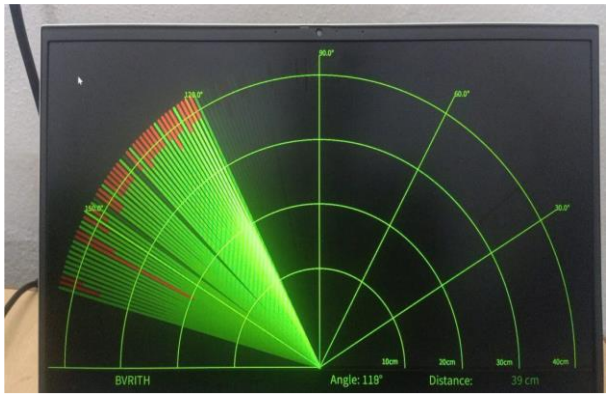

Fig.15: Radar System Visualization.

B. *Distance and Angle Measurement*

Using a machine learning model (k-Nearest Neighbors) in Python, the system successfully classifies detected objects based on their distance values. For example, objects such as "Door" and "Table" were identified, demonstrating the system's ability to label objects intelligently.

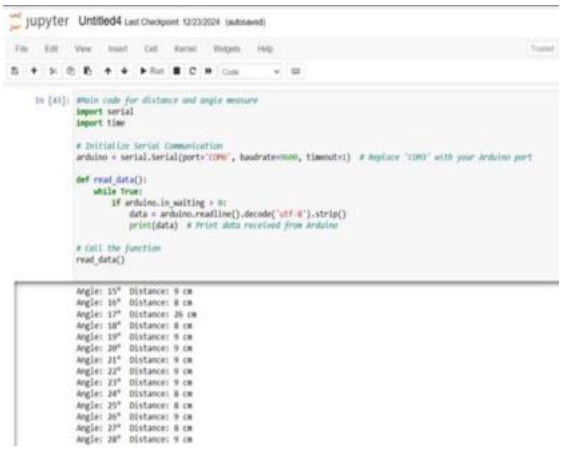

Fig.16: Distance and angle measurements

C. *Real-Time Object Detection Results*

The real-time object detection results are displayed through a Processing interface, showing the detected object's position and distance. The system continuously updates the data as the ultrasonic sensor scans, providing dynamic feedback on object locations. The allows for efficient monitoring and interpretation of the surrounding environment.

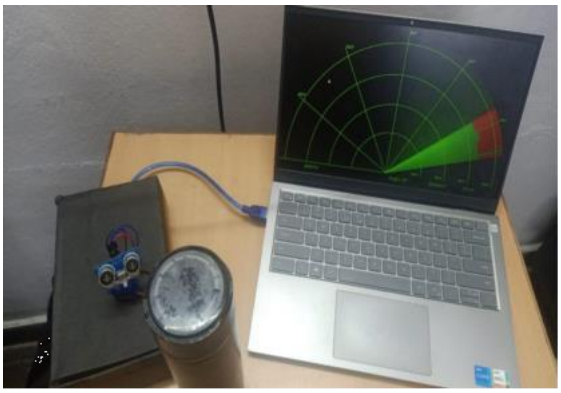

Fig.17: Radar with object

VI. CONCLUSION

The ultrasonic radar system is a cost-effective and efficient solution for real-time object detection and classification, integrating Arduino-based hardware with Python-based software for enhanced functionality. Its radar interface improves visualization, while machine learning aids in object classification, making it ideal for surveillance, autonomous navigation, and security. Future improvements include advanced machine learning models like neural networks for better accuracy, increased sensor range and resolution for larger area coverage, and IoT integration for remote monitoring. Adapting to various environmental conditions can be achieved by incorporating additional sensors like temperature and humidity. The system's scalability will enable applications in robotics and drones, enhancing autonomous navigation. Further advancements may include 3D mapping with multi-axis sensor rotation for improved detection and tracking. These developments will expand its capabilities, making it a versatile tool in smart surveillance, intelligent robotics, and real-time monitoring applications across various domains.

VII. REFERENCES

[1] A. Kashyap, "Design and Implementation of an Ultrasonic Radar System Using Arduino," *International Journal of Advanced Research in Electrical, Electronics, and Instrumentation Engineering*, vol. 8, no. 3, pp. 203-210, Mar. 2019.

[2] J. Smith and R. Brown, "Object Detection and Distance Measurement Using Ultrasonic Sensors," in *Proceedings of the International Conference on Robotics and Automation*, Montreal, Canada, 2019, pp. 451-456.

[3] T. Singh and P. Kumar, "Real-Time Visualization of Ultrasonic Radar Systems Using Python," *Journal of Embedded Systems and Applications*, vol. 12, no. 4, pp. 221-228, 2020.

[4] K. Sharma, "Arduino-Based Ultrasonic Object Detection and Classification System," *International Journal of*

Scientific Research in Engineering and Management, vol. 9, no. 7, pp. 88-94, Jul. 2021.
[5] D. Johnson, *Mastering Arduino Programming: Real-Time Projects with Sensors and Actuators*, 1st ed., New York, NY, USA: Springer, 2021.

[6] M. Z. Rahman et al., "Application of Machine Learning in Object Classification Using Ultrasonic Sensors," *IEEE Access*, vol. 10, pp. 22215-22225, 2022.

[7] R. Smith, "Radar Display System for Autonomous Robots," *Electronics and Communication Research Journal*, vol. 11, no. 2, pp. 140-150, Feb. 2020

[8] A. Patel, S. Mehta, and V. Desai, "Design and Implementation of Cost-Effective Ultrasonic Radar for Real-Time Applications," *International Journal of Engineering Research and Technology*, vol. 8, no. 5, pp. 298-304, May 2020.

[9] M. Chen and J. Lin, "Low-Cost Ultrasonic Sensing for Object Detection and Recognition," *IEEE Sensors Journal*, vol. 19, no. 11, pp. 4254-4262, Jun. 2019.

[10] P. Roy and S. Banerjee, "Radar-Based Monitoring Systems: A Review of Embedded System Applications," *International Journal of Advanced Computer Science and Applications*, vol. 11, no. 3, pp. 45-52, Mar. 2020.

[11] A. Gupta, "Design of Ultrasonic Sensors for Distance Measurement and Object Detection," Journal of Instrumentation and Control Engineering, vol. 15, no. 1, pp. 134-140, Jan. 2021.

[12] S. Patel and R. Verma, "Ultrasonic Sensing for Object Tracking in Autonomous Vehicles," in Proceedings of the International Conference on Smart Vehicles, San Francisco, USA, 2020, pp. 322-327.

[13] M. Alavi and N. Farahani, "Embedded System Design for Ultrasonic Object Detection and Classification," Journal of Embedded Computing, vol. 16, no. 5, pp. 145-152, May 2020.
[14] R. Kumar, "Real-Time Ultrasonic Radar Systems for Surveillance and Security," International Journal of Sensors and Actuators, vol. 19, no. 2, pp. 111-118, Mar. 2021.

[15] P. Sharma and S. Bhattacharya, "Arduino-Based Radar Systems for Environmental Monitoring," Journal of Environmental Sensing and Control, vol. 22, no. 3, pp. 75-82, Jun. 2022.

[16] L. Zhang, "Cost-Effective Ultrasonic Radar Systems for Robotics Applications," Robotics and Automation Journal, vol. 10, no. 1, pp. 58-64, Jan. 2022.

[17] S. Bansal and T. Mehta, "Enhancing Object Detection Accuracy Using Ultrasonic Radar Systems," in Proceedings of the International Conference on AI and Robotics, Tokyo, Japan, 2021, pp. 495-501.
[18] H. Ramesh and G. Kumar, "Ultrasonic Radar Systems for Industrial Automation: A Case Study," Journal of Industrial Robotics, vol. 24, no. 6, pp. 230-235, Dec. 2020.

[19] P. Gupta and S. Chatterjee, "Sensor Fusion Techniques for Ultrasonic Radar Systems," Journal of Signal Processing and Communication, vol. 18, no. 4, pp. 345-350, Oct. 2021.

[20] T. Rao, "Machine Learning for Object Classification in Ultrasonic Radar Systems," Journal of Artificial Intelligence and Robotics, vol. 13, no. 7, pp. 97-103, Jul. 2022.